Whirlpool

USER MANUAL

CONTENTS

Welcome Note 1

Safety Precautions 2

Installation 3

Operating 4

Maintenance 7

Troubleshooting 9

FAQs 11

Dear Homemaker,

Congratulations on bringing home your new Whirlpool appliance!

We would like to welcome you to a very special family of Whirlpool homemakers from around the world.

At Whirlpool we believe in the glory of making every day count, just like how we believe every homemaker counts. To us, true delight lies in getting the everyday tasks done beyond ones expectations.

We also believe that advanced technology should always deliver superior performance, and at Whirlpool, we are purposeful and never lose sight of what performance means and how it should be delivered. We design our Home Appliances with technology that is intelligent, intuitive and innovative. Our Home Appliances provide assurance of powerful results in everyday tasks at home, making moments at home even more enjoyable. That's what we believe in and that's what we are committed to deliver.

Do go through this easy-to-read guide and follow the instructions to get the best out of your appliance. If you have any further queries, simply call the Whirlpool Service Centre.

Whirlpool.

SAFETY PRECAUTIONS

Your safety and the safety of others is very important

We have provided many important safety messages in this manual and on your appliance. Always adhere to all safety messages.

This is the safety alert symbol.

This symbol alerts you to hazards that can kill or hurt you and others.

All safety messages will be preceded by the safety alert symbol and the word 'DANGER' or 'WARNING'

These words mean:

⚠ DANGER You will be killed or seriously injured if you don't follow these instructions.

⚠ WARNING You can be killed or seriously injured if you don't follow these instructions.

⚠ **WARNING:** Do not use electrical appliances inside the food storage compartments of the appliance, unless they are of the type recommended by the manufacturer.

All safety messages will identify the hazard, tell you how to reduce the chance of injury and what can happen if the instructions are not followed.

Proper disposal of your old refrigerator is important

Child entrapment or suffocation are not the problems of the past. Abandoned refrigerators are dangerous even if they are left unattended for a few days.

If you are getting rid of your old refrigerator, please follow these instructions to prevent accidents.

⚠ WARNING

Suffocation Hazard

Remove doors from your old refrigerator. Failure to do so can result in death or brain damage.

Before you throw away your old refrigerator or freezer

- Take out the doors.
- Leave the shelves in place so that children don't climb .inside easily

⚠ WARNING: Keep ventilation openings in the appliance enclosure or in the built-in structure, clear of obstruction.

⚠ WARNING: Do not use mechanical devices or other means to accelerate the defrosting process, other than those recommended by the manufacturer

⚠ WARNING: Do not damage the refrigerant circuit.

INSTALLATION

Steps for installation of (6WBI160 USS / TM465 VCC UI / TM500 VCC UI) Models :

Step 1: Remove the outer carton that is specially designed to protect refrigerator. Inspect the refrigerator to make sure it has arrived in good condition at your home. In case you find any transit damage to your refrigerator, report to your dealer within 24 hours of delivery.

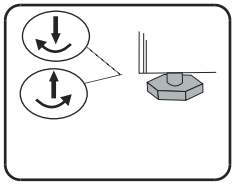

Fig. 1

Step 2: After you unpack the refrigerator, select a well-ventilated spot close to an electrical point. Allow sufficient clearance for dispersion of heat, preferably 6 inches (150mm) at the back, on the sides and top.

Step 3: You can shift the refrigerator by raising the front slightly and sliding it on the rear wheels.

Step 4: Rotate the two front levelers, provided below your refrigerator, clockwise to raise the front and anticlockwise to lower it (refer Fig. 1). The front should be slightly above the rear so that the door shuts gently when left open.

Step 5: Switch ON the refrigerator after around I hour.

Things to keep in mind:

- Keep the refrigerator away from direct sunlight and other high temperature sources like the oven and within cooking range.
- Avoid damp, exposed locations.
- Avoid carpeted areas. A stable installation minimizes noise and prevents tilting.

This appliance is intended to be used in the home and similar applications such as staff kitchen areas, in shops, offices and other working environments.

Getting Connected

Plug the cord of the refrigerator into a 3-prong grounded outlet.

Adjust the cooling settings (refer to pages 4, 5, 6 for instructions).

Ensure that the electrical point is properly earthed. Avoid extension cords.

Run refrigerator for 2-3 hours so that it is cooled sufficiently before keeping food inside.

⚠ WARNING

Electric Shock Hazard

- Do not remove ground prong.
- Do not use an adapter.
- Do not use an extension cord.
- Failure to follow these instructions can result in death, fire or electrical shock.

Note: It is advisable to get your refrigerator installed by an authorized Whirlpool Service Representative.

Refrigeration Compartment (RC) Operating

Now, you can easily adjust all your refrigerator settings according to your needs. Your new refrigerator with its new control panel comes with a host of advanced features that are sure to delight you. Just plug in the refrigerator and follow the instruction given below to discover the convenience of operating a Whirlpool refrigerator.

For Electronic User Interface

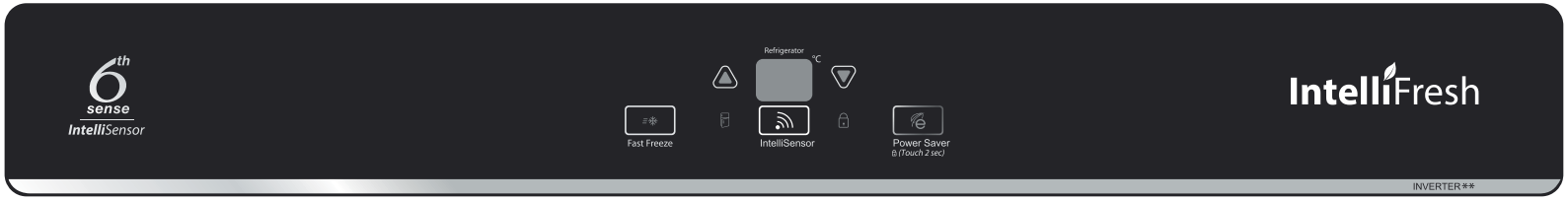

Fast Freeze Mode

This mode makes ice super quick and chills water even in the hottest summers. This can be used in the event of guests visiting at short notice and to fulfill party needs. Press the button to activate Fast Freeze. The icon light will glow when the mode is activated. Once activated, this mode will run for 90 minutes and after that, the icon light will stop glowing. The refrigerator will automatically return to its earlier cooling mode. However, if you want to deactivate it, then just press the Fast Freeze button. The icon light will stop glowing and the refrigerator will return to its previous cooling setting. Pressing any other key will deactivate the Fast Freeze mode also.

Door Open Alarm

Door open alarm alerts you to close the refrigerator door, if it has been left open by mistake for more than a minute. This not only prevents cooling loss but also saves electricity. When the doors are closed, the door alarm icon turns off.

Intellisense Mode

Auto cool (Intellisense mode), intelligently controls the temperature in your refrigerator so that you get perfect cooling, always. When you switch on the refrigerator for the first time, this mode will be automatically activated and the Intellisense icon will be turned on. Auto cool (Intellisense mode) is the next leap in cooling technology. Once activated, the Auto cool (Intellisense mode) feature works continuously in the background while the refrigerator is on. The Intellisense icon glows when this feature is functioning.

Set temperature (for refrigerator only) as per Whirlpool test conditions

The up and down arrow buttons offer you the flexibility of selecting the temperature manually. By default, the refrigerator will be in the Auto cool (Intellisense mode). To increase the refrigerator temperature, press the up button, to decrease the temperature, press the down button. The up and down icons glow with each press.

Power Saving Mode

This mode leads to power saving and is great for when you are going on vacation and want your refrigerator to use minimal electricity. The mode gets deactivated if the door opens or if you press any key on the user interface. If the refrigerator door remains unopened for 72 hours, it automatically goes into the power saving mode, till the door is opened or any button is pressed on the interface.

*** Only applicable to TM465 VCC UI , TM500 VCC UI*

Key Lock

You can lock the user interface to prevent any change in your settings. Press the Power saving button for 2 seconds to activate/deactivate the key lock.

Additional Features

Refrigerators can diagnose the sensor failures in each compartment, so if you find any of the following error codes on the user interface, please call a service centre.

Error code in UI	Failure
E1	Freezer Compartment Sensor
E2	Refrigerator Compartment Sensor
E3	Ambient Sensor

Refrigeration Compartment (RC) Setting

	UP/DOWN Desired refrigerator temperature can be set using UP/DOWN Keys. Temperature range 1 to 7 deg C (1- Coldest, 7 - Warmest) as per Whirlpool standard test process.

Air Flow Control

The Air Flow Control in the freezer controls the distribution of cold air between the refrigerator compartment and freezer compartment. Turn knob to the left for 'Normal Ice' and to the right for 'Fast Ice' setting.
It is preset to the middle position as shown in the picture for uniform cooling in freezer and refrigerator compartments.

Knob Positions	Usage Conditions
Min Freeze	For normal ice in freezer and strong cooling in your refrigerator compartment
Normal	For even cooling in both the refrigerator and freezer compartment
Deep Freeze	For quick ice in your freezer compartment

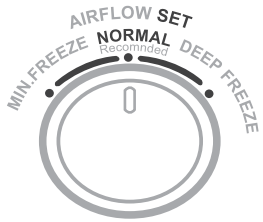

OPERATING

Adapta Shelves
Refrigerator shelves are adjustable.

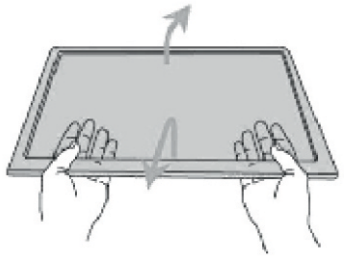

⚠ WARNING

The appliance is not intended for use by young children without supervision.

Young children should be supervised to ensure that they do not play with the appliance.

⚠ WARNING

Keep flammable materials and vapors, such as gasoline, away from refrigerators.

Failure to do so can result in explosion or fire.

To move them:
1. Position both hands under the shelf, holding firmly with your thumbs.
2. Pull the shelf toward you to release it from the rails to be able to move it.
3. Move the shelf, following the vertical rails that are visible on the interior of the refrigerator, to the desired position.

To move down:
3a. When the shelf is loose, move it down by pulling lightly in your direction and shifting it down.

To move up:
3b. When the shelf is loose, move it upwards by pushing the shelf toward the refrigerator and shifting it up.

To remove the Adapta Shelves:
1. Place both hands under the shelf, holding firmly with your thumbs.
2. Pull the shelf towards you to release it.
3. Lift one of the sides of the shelf and tilt it while the other side comes loose from the rails.
4. Pull the shelf towards you and remove it from the refrigerator.

Note: For cleaning, use damp cloth.

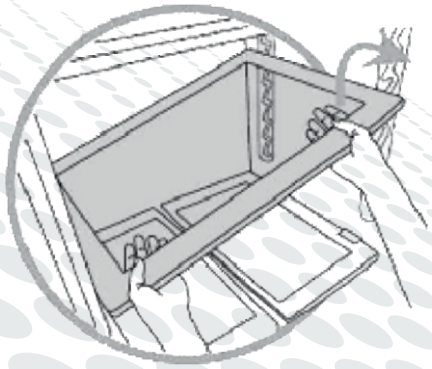

To place the Adapta Shelves back in the refrigerator:
1. Position the shelf, tilted inside the refrigerator.
2. Snap it in one of the rails.
3. Reposition it in a horizontal position.
4. Check that the shelf is attached firmly to the rails.

MAINTENANCE

Cleaning your refrigerator

Before cleaning, always switch off the power supply and remove the plug from the socket.

- Remove all shelves and bins. To remove refrigerator shelves, slide them to the front and push them up gently from the front of the shelf and then pull out.
- Slide out the chiller/everyday fresh slide, tilt upwards and pull out gently.
- Remove the refrigerator and freezer door bins by pushing up and pulling out.
- Use a soft cloth and mild detergent to clean the refrigerator thoroughly. Take care not to damage the door seals.
- Allow the refrigerator to dry by leaving the door open for some time.
- Plug the power cord in and switch the mains on. Allow the refrigerator to cool for some time before placing food inside.

Cautions

- Do not splash water directly on the refrigerator.
- Do not work with flammable sprays.
- Be sure to check the voltage before inserting the power supply cord into the socket.
- Be sure not to re-insert the power supply cord into the socket within 5 minutes of removing it from the socket.
- Ensure that the water does not get into the LED/bulb panels or other electrical components of your refrigerator.
- Ensure that water does not get into the control panel of the freezer door.
- Do not allow water to collect at the bottom of the refrigerator.
- Do not store volatile chemicals such as ether and benzene in the refrigerator.
- The fumes will damage food and also build up and cause an explosion.

MAINTENANCE

Moving your refrigerator

- Switch off the mains and disconnect the power cord from socket.
- Remove all food items from the refrigerator, freezer and vegetable drawer.
- Use a soft, damp cloth to wipe the refrigerator from the inside and outside.
- Fasten the doors and interior components, using tape to prevent them from moving/opening during transportation.
- Lift the refrigerator slightly from the front and slide using wheels at the rear.

Replace the fused lamp

- Disconnect refrigerator - Switch off the power supply and remove the plug from the socket.
- Transparent cover - Locate the transparent cover on the control box.
- Remove the transparent cover- Using a blunt edged screw driver, remove the lamp cover using the thumb depression provided at the bottom.
- Remove the fused lamp - Turn the lamp in the anti-clockwise direction to unscrew.
- Replace the new lamp - Replace the fused lamp with a new lamp of rating (15W) and fasten it in the lamp socket by turning it clockwise.
- Put the transparent cover then restart - Put the lens back in position, plug the power cord in the mains and switch ON.

TROUBLESHOOTING

PROBLEM	PROBING	SOLUTION
Refrigerator does not work	Is the power cord plugged in the socket?	Reconnect the power plug.
	Is there a power breakdown?	Wait till the power resumes.
	Has the circuit breaker tripped?	Check with an electrician.
Ice formation is slow	Is the air flow knob set to normal ice position?	Set your upper compartment knob (Airflow knob) to fast ice mode.
Cooling in the refrigerator is insufficient	Is the passage obstructed by food?	Reposition the food items kept directly in front of the air duct. Do not overload the refrigerator, enough space should be kept for cool air circulation.
	Are the refrigerator doors fully closed?	Always ensure doors are in a completely closed position.
	Are you storing hot foods in the refrigerator?	Do not keep hot utensils in the refrigerator.
	Are there frequent door openings?	Avoid frequent door openings to minimize cool air losses.
Excess cooling in the refrigerator	Have you checked the setting?	In case of excess cooling in RC compartment, adjust the display setting (on the UI Panel/Thermostat setting) to a level higher from the current setting.

Electrical Shock Hazard

- Do not attempt to modify any part of the appliance.
- Do not connect this appliance to power sources other than specified.
- If the power cord is damaged, have it replaced by your Whirlpool Service Center.
- Do not use mechanical devices or other means to accelerate the defrosting process.
- Do not damage the refrigerant circuit.
- Do not use electrical appliances in the food storage compartments.

PROBLEM	PROBING	SOLUTION
Internal water leakage	Are there any water droplets on the shelf / air diffuser?	Shelf & Air-Diffuser Condensation- As cold air is getting circulated, it is very normal to get fogginess on the shelves and air-diffuser.
	Are there any water droplets on the shelf / air diffuser / crisper cover / crisper bottom?	To conserve electricity, it is always advisable not to keep refrigerator open for a long time; Ensure that surroundings do not have any airflow source.
	Are there any water droplets on the shelf?	For fridge door / floor water leakage, check for water bottle spillover.
Vegetables are getting spoiled in the crisper	Are there vegetables in plastic bags and are they wet?	Vegetables should not be kept in non-ventilated plastic bags.
Refrigerator side walls / center rails are hot	This is not a problem. The walls heat slightly during normal operation?	Please refer to the sticker pasted on the side wall, it is intended to evaporate moisture or droplets.
Refrigerator gives a mild shock	Is your house wiring done properly?	Please get your house wiring checked by an electrician.
	Is this static discharge shock?	This can be due to static charge accumulation on the human body, which is a regular phenomenon and not a product specific issue.
Smell inside the refrigerator	Has the refrigerator not been cleaned recently?	Please clean your refrigerator frequently.
Smell outside the refrigerator	Are there smell issues - outside the refrigerator?	Food / Milk products / Insects / impurities that deposit at the Defrost Water tray for a long time can lead to smells behind the refrigerator.
Door not closing	Is there any packaging styrofoam present on the refrigerator?	Check if the styrofoam is stuck between the freezer and the refrigerator door.
Freezer door opens when fridge door is closed	Do the freezer door open when the fridge door is closed?	It is a normal occurence due to pressure differences between the refrigerator- freezer compartment.
Door alarm not working	Is there an alarm after keeping the refrigerator door open for more than 2 minutes?	Call customer care.
Ants / other insects in the refrigerator	Do the food items contain ants, even before keeping it in the refrigerator?	For insects - If food / utensils are kept near a high luminance source, then it attracts insects towards it. It is recommended to keep the product away from light and airflow sources. For Ants - Check the food for ants before keeping them in the refrigerator.
Noise	Is there proper installation?	Refrigerator is installed in a weak or uneven place or leveling screw needs adjusting.

FAQS

Q.1 Is moisture in the vegetable drawer normal?

Ans. Yes. As the water in the vegetables evaporates, it strikes the cold surface of the refrigerator, hence resulting in formation of water droplets. The humid air over the vegetable is however swept away by the dynamic airflow inside the refrigerator, keeping your vegetables fresh.

Q.2 Why do I hear a noise from the back of the refrigerator?

Ans. The refrigerator is kept cold inside with the help of a cooling coil, a fan motor which is inside the product and a compressor which is fitted at the bottom rear side of the refrigerator. During the operation of the refrigerator, it is normal to hear a humming noise.

Q.3 How much power does my refrigerator consume per day?

Ans. Normally, any frost-free refrigerator would consume anywhere between 1.5 to 2 units per day, however, depending on the usage pattern, it can even go higher.

Q.4 Why is there smell emanating from my refrigerator?

Ans. Check if any item which emanates strong smells has been kept unwrapped in the refrigerator. If so, wrap it in polythene or keep it in a closed container. Keeping cut lemon will also help in reducing the odor.

Q.5 How much time is required to make ice?

Ans. Depending on the room temperature and the door opening frequency, the ice making in the trays provided could be anywhere between 90 rains to 135 rains. However, depending upon the usage pattern, it can even go higher.

Q.6 Why are the sidewalls hot sometimes?

Ans. Sidewalls are warm as a hot gas tube is provided at the side edges of the cabinet. This helps in avoiding moisture formation on the walls when humidity is high.

Q.7 Why is there a noise when the compressor starts?

Ans. It is normal to hear noise when the compressor starts and stops

Q.8 How frequently should I clean my refrigerator? Can I use detergents?

Ans. It is advisable to clean your refrigerator twice a month. You can clean it with warm water and mild detergents.

FAQS

Q.9 What is the use of a chiller/Everyday fresh slide?

Ans. The chiller provides colder temperatures than that of shelves and the vegetable drawer. This compartment can be used for faster cooling of water, beverages, beer and milk preservation etc. As a precaution, please do not store bottles for a long time as they could freeze or burst.

Q.10 Why do vegetables get spoilt when kept on the top shelf (below chiller)?

Ans. The zone below the chiller is not suitable for vegetables. It is recommended to store vegetables in the vegetable drawer, which has the desired temperature for keeping vegetables fresh.

Q.11 Does milk get spoilt when kept in the vegetable drawer?

Ans. Milk needs a colder temperature for it to remain fresh. Since the vegetable drawer is kept at a warmer temperature, milk will get spoilt in it. It is recommended to store milk in the chiller.

Q.12 I wish to keep the door open for some time. However I don't want to hear the alarm sound. What do I have to do?

Ans. 6th Sense Door Open Alarm buzzer is provided to alert the user when the door is left open for more than 2 minutes. However, if the door is to be intentionally kept open for more than 2 minutes, the buzzer may be temporarily switched off by pressing the 6th Sense Door Open Alarm switch.

Q.13 Do I need to clean the back tray of my refrigerator?

Ans. As your product is equipped with frost-free mechanism, you need not clean the tray. However, in extreme moisture conditions, you may be required to empty the tray.

Q.14 What brand of stabilizer is recommended?

Ans. Whirlpool recommends Duromax Voltage Stabilizers. For specifications, please contact your nearest Whirlpool Authorized Service Partner.

Hazardous Substances:

A few components used in manufacturing this refrigerator contain low content of some substances classified as hazardous, according to EWaste Rules published by the Government of India. These do not pose any risk to the storage of food and beverages in the refrigerator. Nor does physical contact with the refrigerator during the life of the product endanger health or safety to humans or any living creature. However, if the refrigerator is not disposed of safely at the end of its life, inappropriate handling of waste may pose risks to health and environment. Hence, it is our advice that you contact Whirlpool when you are ready to discard the product so that we can channelize the appliance and its components for safe disposal.

Refrigerator Disposal:

By ensuring this product is disposed of correctly, you will help avoid potential negative consequences for the environment and human health, which could otherwise be caused by inappropriate waste handling of this product.

The Symbol on the product or on the documents accompanying the product, indicates that this appliance may not be treated as household waste. Instead it shall be handed over to the authorized collection center for the recycling of electrical and electronic equipment waste generated at the end of life of the product. Disposal must be carried out in accordance with local environmental regulations for e-waste disposal ,which mandate channelization of e-waste to authorized collection center's) or registered dismantler(s) or recycler(s) or returned to the pick-up or take back services provided by the manufacturer.

Whirlpool

W11180980